TEAGO
Bath Solutions

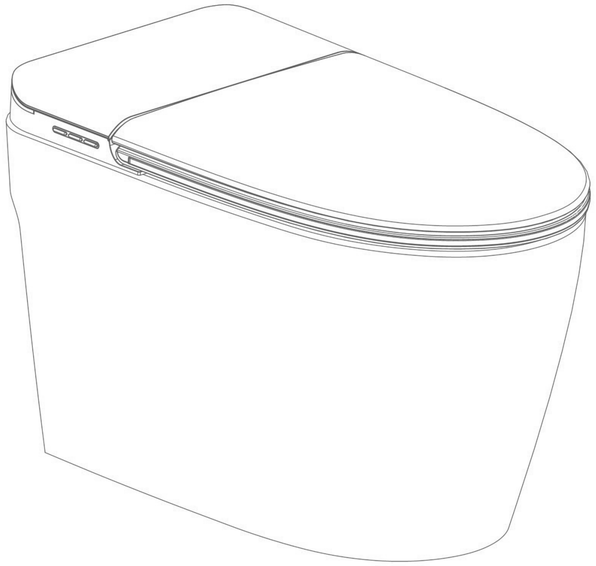

PRODUCTS INSTRUCTIONS

CONTENT

List of Functions - 01
List of Configurations - 02
Safety - 02
Warning - 03
Using Notes - 07
Names of parts - 09
Side Buttons - 09
Digital display - 10

Instructions

Check-lists before initial start-up - - - - - - - - - - - - - - - 10
Remote Control - 12
Detail of Remote Control - 13
Optional Featured Function - - - - - - - - - - - - - - - - - - - 15
Operating Note - 16

Thanks very much for using our products.

Please read and follow the instructions carefully before using.
Save the instructions in proper place and do not loss it.

There would be a little difference from each item.

The shape of item in the manual is for reference only.

The company will not notify you of functional differences due to product upgrades and other reasons.

If there are objections, our company reserves the final interpretation right of the manual.

Routine Maintenance

Daily cleaning - 18
Installation - 19
Not use in a long time - 21
Replacement of battery - 21

Freeze in Case - 22

Problem & Solution - - - - - - - - - - - - - - - - 23

Specification - 24

Main Functions

Rear Cleaning	Rear cleaning by output water from nozzle
Bidet	Bidet cleaning for ladies
Moving Spray	More cleaning effective by moving nozzle
Water Pressure Massage	The pressure of the cleaning water alternates to achieve the effect of massage.
Children	Press one button to activate full functional auto wash without seated sense.
Nozzle Arm Position	Adjust the nozzle arm forward and backward to get the best washing position to fit the user.
Seat Heating	The cover can be kept in comfortable temp. by mico CPU control
Warm Wind Drying	Automatic drying after cleaning
Soft Close	Dampers cushion the toilet seat and lid noiselessly and slow down closing.
Auto-Sensor	The toilet will stand by while people seat on the inductive area
Smart Flushing	Auto flush will work after the user leaving the seat after sitting down for more than 10 sec, or in one-key mode or pressing the flush button.
Nozzle Self-cleaning	The spray arm and nozzle will be self-cleaned with fresh water.
Energy Saving	Set the Eco mode to save the energy.
Pressure Adjusting	Press the water pressure adjustment button to cyclically set the washing intensity.
Instant Heating	The washing water will be instantly heated to the set temperature.
Power-off Flushing	The flushing can still work while the power is off. (Optional function, subject to each model)
Auto Open	When Auto open is enabled, the lid and seat will automatically open when someone approaches about 30 CM close to the toilet (Optional function, subject to each model).
Temp. Protection	The nozzle washing will be deactivated in case that water is cut or off.
Foot Sensor Flush	When the foot sensor under the toilet is activated by foot motion, the toilet automatically flushes once (this function is available only on Type B models).
Foot Sensor Seat	When the foot sensor under the toilet is activated by foot motion, the seat automatically lifts (this function applies only to Type C and Type EH models).
UV Sterilization	the UV light will be activated to work for 1 min when the seat cover is close after a seated status for more than 1 min (optional function, subject to model)
Aromatherapy deodorization	Aromatherapy deodorization factor enter into air, encircle and exterminate peculiar smell molecule spontaneously, decompose and disorganize the peculiar smell molecule in the air, reduce the stink.
Ambient lighting	Monochromatic ambient light, can be turned on and off.

Functions For Each Type

Function / Type	Rear	Bidet	Move	Spa	Position adjust	Warm seat	Warm wind	Deodori-zation	Soft close	Power cut flush	Power saving	Nozzle clean	Smart flush	Press adjust	Night light	Instant heating	Seat sensor	Auto cover	Foot sensor cover	Foot sensor flush	Foam shield	UV Steril-zation
B	✓	✓	✓	✓	✓	✓	✓	✓	✓	✓	✓	✓	✓	✓	✓	✓	✓	✓	✓	✓	X	✓

This list consists the full functional features. For the model you choose, there will be optional function, subject to model.

Important Safety Instructions

Please read these precautions carefully before installing or using the product.
Always follow safe operating guidelines when using this product.

⚠ WARNING -Avoid accident of electric shock

1. Do not use the product in a wet environment.
2. Do not drop the remote control into bath tub or sink or any liquid.
3. Do not put water onto product or electric plug.

⚠ WARNING -Avoid accident of getting burnt, electric shock and fire

1. This product is not intended for use by persons with reduced physical, sensory, or mental capabilities, or lack of experience and knowledge (including children), unless they have been given supervision or instruction concerning use of the appliance by a person responsible for their safety.
2. The product includes functions showed in this manual only. Please do not use extra devices unless we recommend.
3. If the power cord is damaged, immediately disconnect the power supply. To avoid danger, it must be replaced by professionals from the manufacturer, its service department, or a similar department.
4. Ensure the power cord is not damaged by heat.
5. Please do not use the product if you take sleeping pills or are over drinking， or feel drowsiness.
6. Please do not put anything into the hole or water tube.
7. Please do not use the product outdoors.
8. Supervise children to ensure they do not play with the product.
9. Use only the new hose assembly provided with this product. Do not reuse old hose assemblies.
10. This product is a fixed appliance and must be installed by a qualified professional in a designated location.
11. When unplugging from the outlet, do not pull on the power cord.

Please Keep The Manual in place

Safety Notes

Please do read and follow the instructions carefully before using. They are about safety of person.

Symbols and meanings	
Warning	Ignoring this tag may cause serious injury or death.
Caution	Ignoring this tag may cause injury or property loss.

Symbols and meanings	
	Dismantling is forbidden.
	Must follow.

1. This product is suitable for use at altitudes below 2,000 meters.
2. When connecting to the water supply, the applicable water pressure range is 0.15–0.75 MPa.

Warning

No splash

It is forbidden to drop any water and detergent on the product or the electric plug.

- May cause fire or electric shock.
- May cause breakage or leaking.

The smart toilet is an electric product. Please avoid splash and use it in a wet environment. Maintain air circulation when the product is used in bathroom.

- May cause fire or electric shock.

Set the electric socket as below

- May cause fire or electric shock if not follow the instructions.

a. Please use a high-sensitivity and fast leakage switch for the circuit of the electric socket. Or to use insulated transformer (>1.5KVA, <3.0KVA).

b. The electric socket should be installed 0.3m at least up to ground and away from the bath tub.

Must install the ground wire

- May cause electric shock without ground wire.

Attn: The electric resistance should be 4Ω and the diameter of the copper wire should be 1.6mm or above.

Using the product in bathroom

Make sure the power plug has been waterproofed with silica gel.

- May cause fire or electric shock without waterproofing.

Warning

No wet

Do not use the product in wet environments.

- May cause fire or electric shock.

No disassemble

Dismantle, repair or remould the product are forbidden

- May cause fire or electric shock.

No wet hand

Do not touch the electric with wet hands.

- May cause electric shock.

Forbidden

Stop using the product while it has malfunction

- Please pull out the plug and turn off the inlet valve.

Malfunction:
Leakage
Dehiscence
Abnormal sound & smell
Fuming & abnormal heating
Blocking

- Keep using the product while it has malfunction may cause fire or electric shock or leakage.

Forbidden

Do not damage the electric wire/connected toilet

Do not pull,process,heat,forcefully bend the electric wire connected toilet.

Do not put heavy item onto the electric wire,connected toilet.

- Ignorieg the breakage and keep using product would cause fire, electric shock or short circuit.

Forbidden

Do not use a unsteady socket

- May cause fire or electric shock.

Forbidden

Do not use the power socket with lots sockets

- Do not remould the wire we supply. That would cause fire or electric shock.

Forbidden

Do not use water sources other than city water

- May cause dermatitis.

Forbidden

Do not use the AC except the working voltage

- May cause fire.

Warning

Must follow

PREVENT GETTING BURNT

- Please set the seat temp. to home temp. if seating in a long time.
- When the following individuals use the heated seat or warm air drying function, please adjust the seat temperature to the normal temperature setting and the warm air temperature control knob to level 01 (low).

Users people who can not adjust the temperature correctly like children, elder, disabled, paraplegia etc..

who take sleeping pills or over drinking or weary or drowsiness

Warning

No fire

Do not any fire thing get close to the product

- May cause fire.

Forbidden

Do not block the outlet of warm wind

- May cause fire, electric shock or breakage.
- Pay attention to children or the elder is using the product.

Forbidden

Do not tackle the product strongly
Do not stand on the product or put heavy items on it

- May cause breakage or injury.
- May cause leakage.

Forbidden

The surface can be cleaned with neutral detergent only
Do not use things as below

(Bath detergent, domiciliary detergent, petrol, thinner, cleaning powder, nylon brush, etc.)

- May cause breakage or injury.
- May cause leakage.

Forbidden

Do not dismantle the inlet fillter while the inlet valve is on

- May cause leakage.

Forbidden

Do not bend the tube

- May cause leakage.

Forbidden

Do not drop into the toilet bowl

- May cause block & leakage.

Must follow

Ture off the power if the product is not in use for a long time

- Pull out the plug for safety.
- May cause dermatitis by rancid water.

Must follow

Ture off the inlet valve while it is leaking

Must follow

Prevent the damage from being freezed

- The inlet device and part of prodcut would be damage by freezing and cause leakage.

Must follow

Solidly install the inlet valve

- May cause leakage if not to do.

Please keep proper home temp.

Must follow

Plug the electric plug well

- May cause fire if the plug is unsteady or not plugged well.
- Pull out the electric plug if the product not in use in a long time
- To unplug, grasp the plug firmly and pull. Do not pull on the cord.
- If an extension cord is necessary, use only one that meets national safety standards.

Must follow

Please pull out the electric plug while the toilet is blocked
Reuse untill the blockage is cleared

- May cause leakage while running the cleaning function if not pull out the electric plug.

Must follow

Do not expose the product in direct sunlight

- May cause damage of discoloration, aging and deformation.

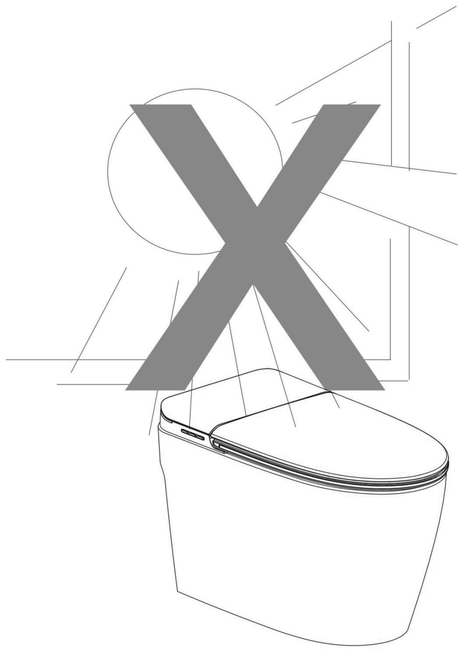

Using Notes

Wrong cleaning manmers

Do not wipe the product with dry cloth or toilet paper.

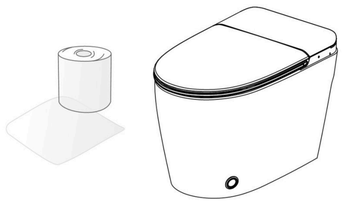

Flushing directly is forbidden

Routine maintenance

Do not urinate on the nozzle or product.

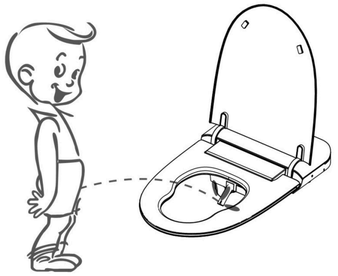

Pull out the electric plug when it is thundering.

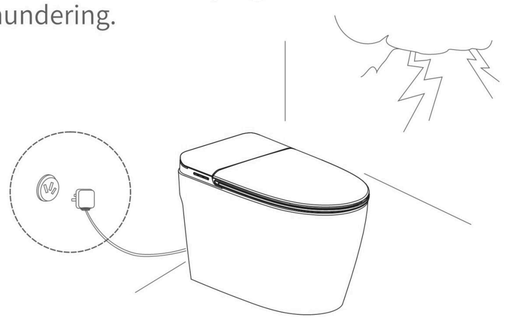

Attention of operation

Do not cover the sensor area, foot sensor, and the signal receiving and sending area of the remote control

Radio or similar products should stay away from the toilet.

- May cause much noise.

Do not lean your back on the cover

- May cause breakage.

Take the childen cover away after childen using the toilet fany.

- Not doing so may cause some functions can not run.

Using Notes

Please prevent the freezing in winter to avoid damage.

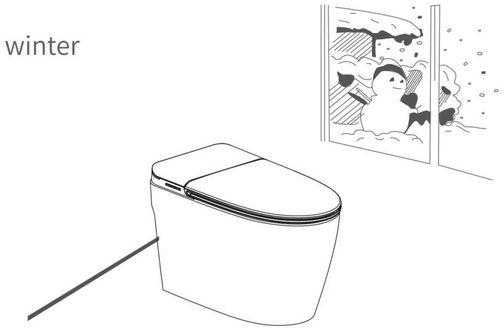

The heating apparatus should stay away from the product.

- Not doing so may cause discoloration or errors.

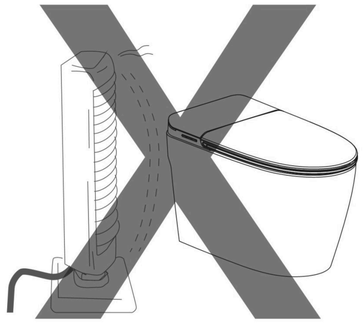

Please open the cover lid and cover seat gently.

- Not doing so may cause breakage or errors.

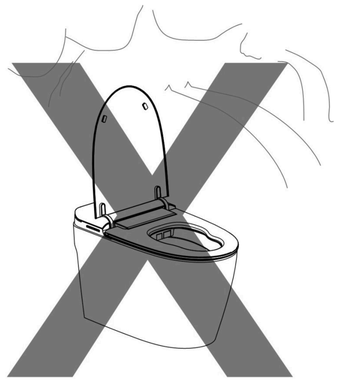

Name of Parts

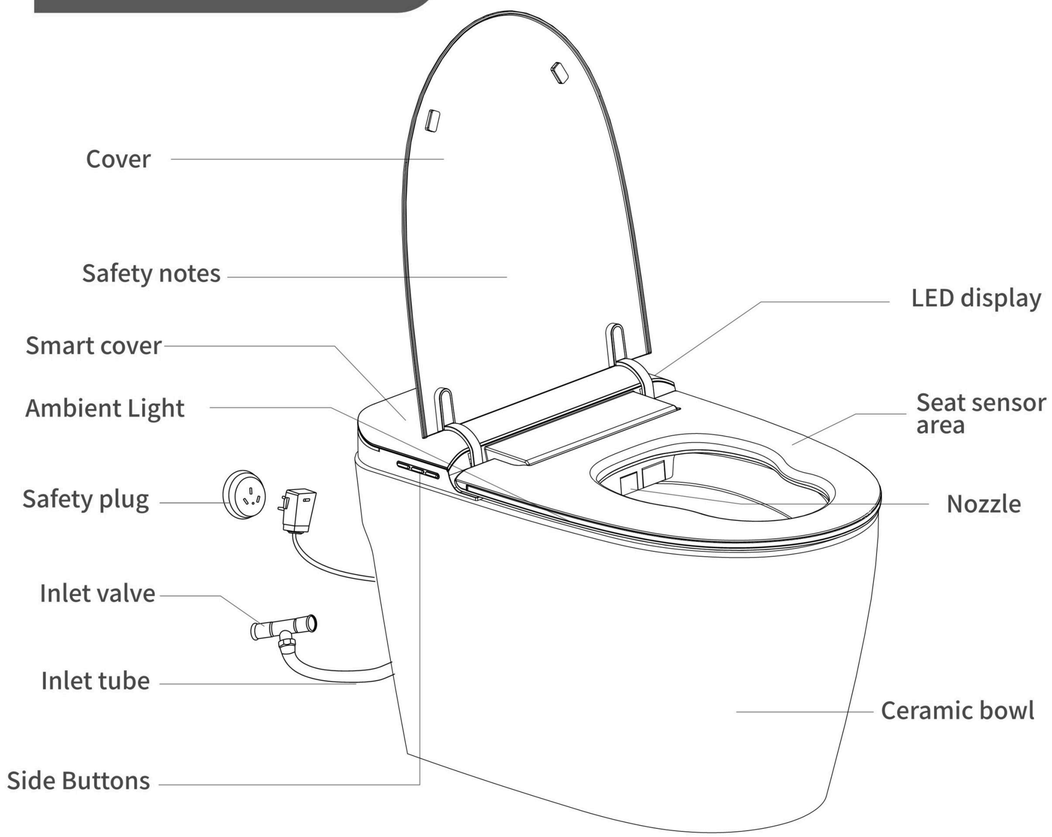

Side Buttons

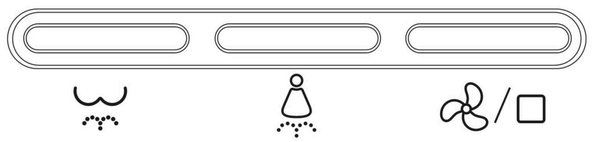

When seated, press this button to activate buttocks cleaning . Press the button again to switch to moving cleaning, and repeat the process. Press the stop button to end the operation. This function can also exit automatically after the user leaves the seat. If no one is seated, pressing this button activates the self-cleaning function of the spray wand.

When seated, press this button to activate feminine cleaning. Press the button again to switch to moving cleaning, and repeat the process. Press the stop button to end the operation. This function can also exit automatically after the user leaves the seat.

When seated, pressing the stop button during cleaning or drying will stop the ongoing action. If not cleaning or drying, pressing the stop button will initiate flushing, and holding it will activate drying. When not seated, pressing the stop button initiates flushing, and holding it shuts down the software (even when powered down, a single press can activate flushing with battery backup during power outages).

LED Display

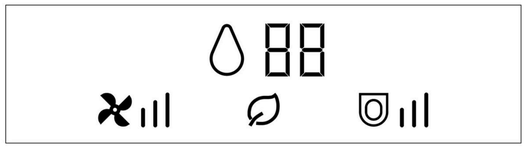

Indicates the temperature level of the spray wand’ s water.

Indicates that the smart toilet is currently in energy-saving mode.

Indicates the warm air drying has four temperature levels; the higher the temperature, the more bars are illuminated. No illuminated bars indicate room temperature.

Indicates the seat has four temperature levels; the higher the temperature, the more bars are illuminated. No illuminated bars indicate room temperature.

Before Using

Please confirm things as below before using the product at first time.

Plug well

1. Plug in the Listed local voltage.

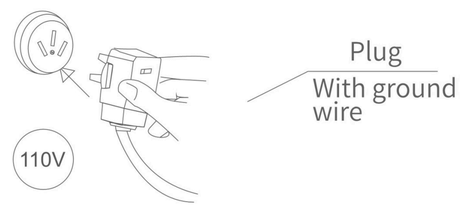

2. Please the inlet valve is opened or not.

Leakage Protected Plug

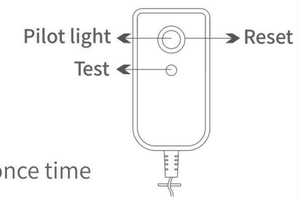

1. Please test once time each month
2. Press the “test” button
3. Confirm that the “pilot light” is off
4. Confirm that the product is out of work
5. Press the “reset” button to boot the the poduct if every steps as above are OK.

Warning

- Please make sure the gound wire.
- Please contact electrical installation company if your socket is without ground wire.
- The original electric plug is for triple electrode type. (with ground wire)
- There will be changer of the electric shock while the product is out of work.
- Ensure the proper installation of water pipe, tube and valve, otherwise that would cause leakage and loss.

Before Using

Confirm each function

1. The nozzle, water pipe and tube.
2. Check the rear & bidet washing and drying function is well or not.

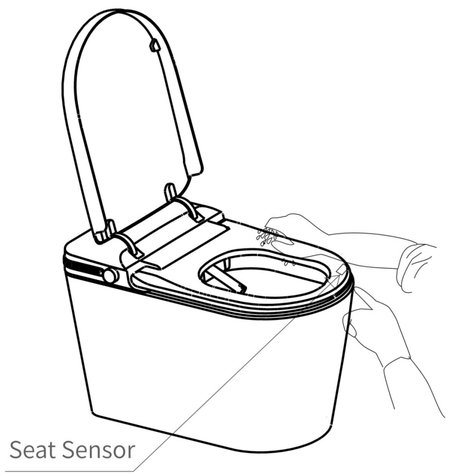

Confirm that the seat sensor is on working and the light of “saving mode” or the pilot light is o ffbefore checking the function of washing, drying and deodorization.

Caution

1. The washing function is for instant heating type.
   The function would be out of work if the water inlet is error.
2. Ensure the inlet valve is open and the inlet tube is not bent after the product is booted.

Warning

Only the listed voltage is a ccepted(AC 110V 60Hz). Please follow the relevant regulations for wiring.

＊ Will cause fire if ignore this warning ＊

Remote Control

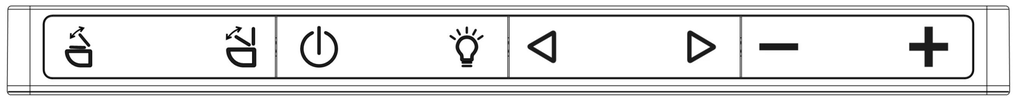

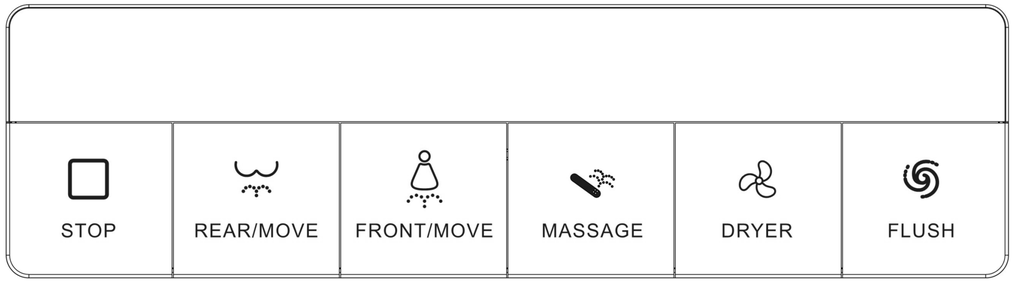

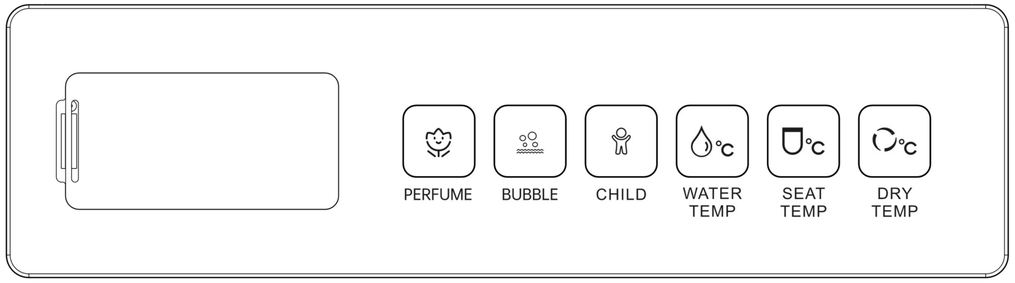

Pair the remote control to toilet

Step1: Disconnect the power supply (residual current device).

Step 2: Press and hold the feminine wash button on the remote control. When the display shows two dashes, plug the main unit into an AC110V power source. Once powered on, the pairing can be completed successfully.

Please make sure there is sufficient power supply for the remote control before pairing. Cut off the power of the intelligent toilet for 30 seconds and then apply the above steps for paring to remote control.

Operation

Power on/off
Press the "Power" button on the remote control to turn on the toilet, press the power button again to turn it off.

Seat Temp.
Press the "Seat Temp." button to toggle through the normal temperature setting and three other temperature levels.

Water Temp.
Press the "Water Temp." button to toggle through the normal temperature setting and three other temperature levels.

Wind Temp.
Press the "Wind Temp." button to to toggle through the normal temperature setting and three other temperature levels.

Rear washing
Press the "Rear" button to activate the washing via the nozzle, press again to activate moving washing,Cleaning will automatically end after 120 seconds.(Rear washing can only be activated when a user is sitting on the toilet.)

Bidet washing
Press the "Bidet"、"Female" button to activate the bidet washing, press again to activate moving washing,Cleaning will automatically end after 120 seconds. (Bidet washing can only be activated when a user is sitting on the toilet.)

Children
Press the "Children" button will automatically run washing-dryer-flush step by step with medium temperature, press the "Stop" button to stop immediately. (This function can be activated with or without a user is sitting on the toilet.)

High/Low Massage
Press the "Massage" button to start with a switching high-low pressure of washing water while the rear or bidet washing is working.

Position
Press the "Position" button to adjust the nozzle forward or backward of moving washing while the rear, Children or bidet function is running. The nozzle will move forward and backward. Press the same button to stop moving.

Water Pressure Massage
Press the "Water Pressure" + − button to start with a switching high-low pressure of washing water while the rear or bidet washing is working.

Dryer
While Seated,Press the "Dryer" button to start. Without manually stop, it will stop working after 3 mins.

Operation

Flush
Press the remote control flush button " ", and the toilet will automatically flush once. If the user remains seated for more than 10 seconds and then leaves, the toilet will automatically flush once. While seated, if the buttocks or feminine cleaning function is activated, the toilet will automatically flush once after cleaning, followed by drying. When using the remote to activate buttocks or feminine cleaning, the toilet will flush once after the user leaves (no flush or drying occurs if the user does not leave the seat; manual activation is required). Note: For pump models, there must be at least a 30-second interval between two flushes.

Night lighting and ambient lighting
Press the nightlight button " " to turn off the nightlight and ambient light. Press it again to turn off the button light. Press it once more to turn on the nightlight, ambient light, and button light.

Stop/Reset
Press the "Stop/Reset" button to stop any running function like rear washing, dryer, etc.

Auto Open/Close (optional function, subject to model)
When the user approaches the seat cover, it opens automatically. If the user leaves after more than 5 seconds, the cover closes automatically after 30 seconds. If the user leaves within 5 seconds, the cover closes automatically after 120 seconds. When the seat and cover close simultaneously, the toilet automatically flushes once (this function is only applicable to models with automatic seat and cover opening/closing, as noted below).

Open Cover (optional function, subject to model)
Press the "Cover" button to open the cover when it is closed. Press the "Cover" button to close the cover when it is open. (This setting will not work with a seated status) (optional function, subject to model)

Open Seat Cover (optional function, subject to model)
Press the "Seat Cover" button to open the seat cover when it is closed. Press "Seat Cover" button to close the seat cover when it is open. (This setting will not work with a seated status) (optional function, subject to model)

Foot Sensor Functions
For models with automatic seat function (Types C, E, H): When a foot approaches the foot sensor at the front bottom of the toilet body, the seat automatically opens/lifts; a subsequent activation closes/lowers it. Type B models do not have automatic seat opening/closing; one activation triggers a single flush.

ECO (optional function, subject to model)
When the energy-saving function is activated, if no operation occurs for over 12 hours, the seat temperature will automatically drop to the lowest setting. After 48 hours, the seat heating will turn off.

Operation

Anti-Scald Seat Protection

All models feature anti-scald seat protection. Upon seating, the seat temperature automatically switches to low mode; it returns to the previous setting after the user stands up.

UV Sterilization (optional function, subject to model)

The UV Sterilization will start after 3 sec when a user leaves a seated status for more than 60 sec and the cover i s close.(Sterilization time: 60 seconds).

Fragrance Function

Press the fragrance button " " once to activate fragrance for 5 seconds (auto off). Press and hold the fragrance button " " for 3 seconds (1 beep) to enable automatic fragrance release when seated. Press and hold the fragrance button again for 3 seconds (2 beeps) to disable automatic fragrance on seating.

Featured Function

Microwave On-Off (optional, subject to model)

Simultaneously keep pressing the "Night Light" and "Water Pressure + or -" to adjust the microwave sensing distance from minimum 00 to maximum 05.

Soft-shutdown

When not seated, press an d hold the side "Stop" button to turn the unit on or off.

Attention: A user can't use dyer and washing function while the seat is not taken.

Fragrance Refill Instructions

After the fragrance liquid is depleted, disable the auto-fragrance on seating function if not in use, to protect the atomizer.

Steps to Add Fragrance Liquid:

1.Remove the rear decorative cover plate and pull out the fragrance liquid tank plug.

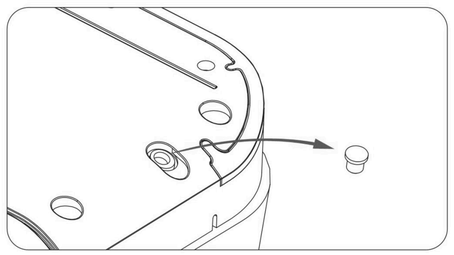

2.Use the provided small plastic bottle, fill it with water, and pour into the tank (add up to two bottles of water at a time).

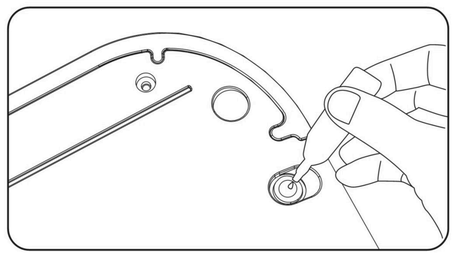

3. Use the provided aromatherapy dropper to add fragrance liquid (recommended: 2–3 drops).

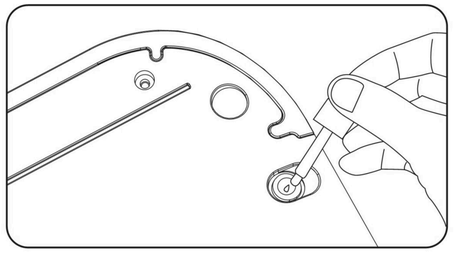

4. Replace the plug securely, then reattach the decorative cover plate.

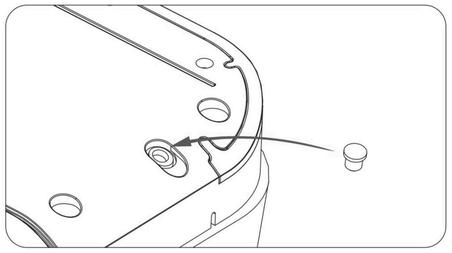

Using Notes

Water Temp.

Capacity

Instant heating device ensure the

Water temp. base on levle setting

Normal: No heating
Low : About 34℃
Mid : About 37℃
High : About 40℃

The effect of heating dependson the water temp.

Seat Sensor

The washing functions would not run by operation in error

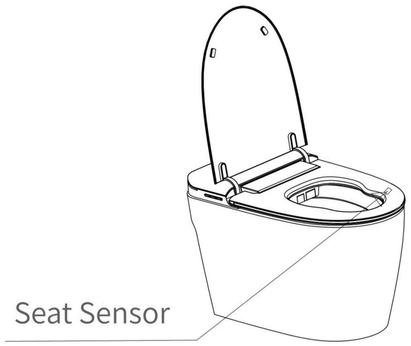

The seat sensor would not work if:

※ No people the seat sensor area.

Using Notes

Energy Saving(ECO)

Would save energy as below

- Close the cover after using
- Do not set the high level for temp. every time
- Set the suitable temp. on seasons and air temperature
- Use the energy saving as much as possible
- The power if the product will not in use for a long time

※ Prevent the freezing

Close Cover Softly

The soft-close device would avoid the noise of cover colsing

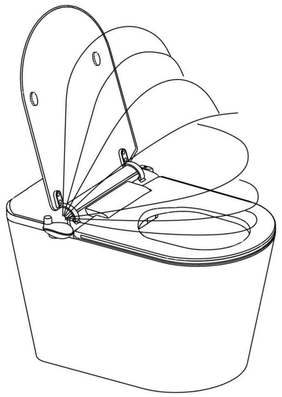

Water flow out ?

That would be normal that some water flow of the nozzle before/after washing or while the water temp. setting is on.

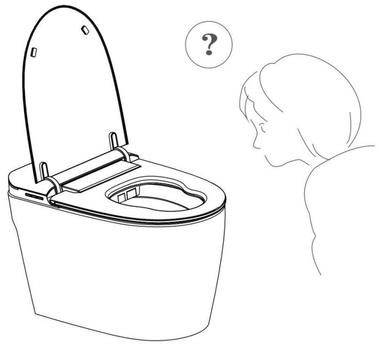

Please close the inlet valve and pull out the plug if the water keep flowing out besides the situations as above. And you need to contact the agency.

Maintenance

⚠ Warning

Make sare to unplug pull out the electric plug and confirm the pilot light is off before maintenance.

Maintenance of Smart Toielt

Please use soft cloth with clean water

- Please wipe the product often with wet soft cloth in case of the dirt is too hard to clean out. In addition, the wet soft cloth can avoid the static to adsorb dust and cause the product dirty.

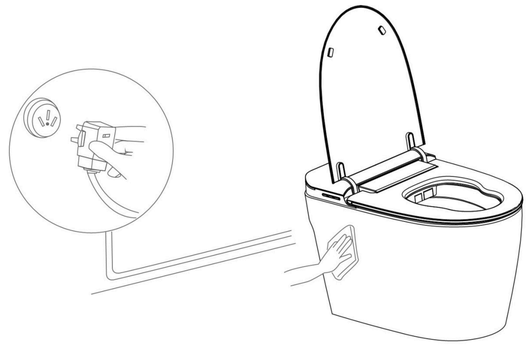

Maintenance of Nozzle

Please clean the nozzle with soft brush.

※ Twhile not seated, pressing the buttocks cleaning button on the side panel or remote control will extend the cleaning nozzle.

※ Do not pull out and bend the nozzle by force.

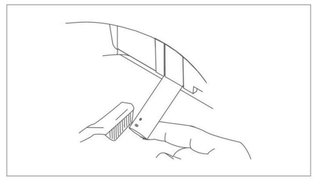

⚠ Warning

Must follow

Please clean the dust on the electric plug.
Clean the plug with dry cloth after pull it out of socket.

※ Poor insulation may cause fire.

Installation Steps

1. Prepare all required installation accessories.

   Note: Purchase a compatible closet flange separately to match the spacing of the two mounting bolt holes on the toilet base

Closet flange

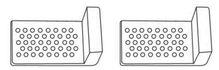

L-shaped mounting bracket

See Figure (1)

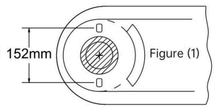

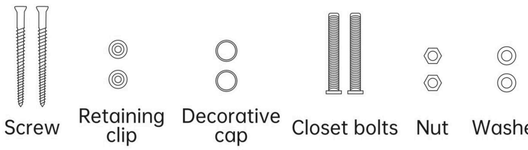

2. Install the closet flange over the drain outlet.

   (1) Place the closet flange over the drain outlet first;

   (2) Install the closet bolts, L-shaped mounting brackets, and other accessories as shown in Figure (2);

   (3) Position the assembled L-shaped mounting brackets and bolts from step (2) on both sides of the closet flange, then tighten the nuts securely.

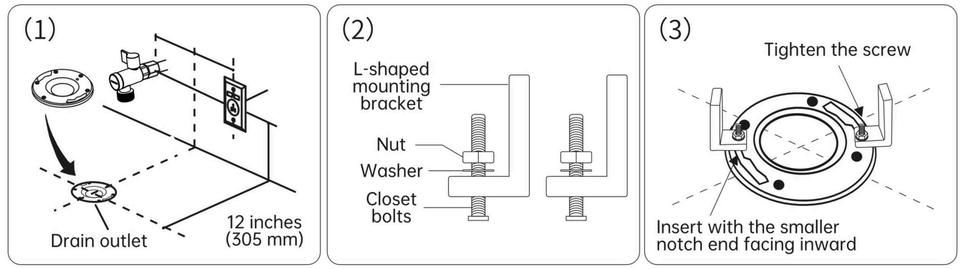

3. Install the flange ring onto the closet flange, ensuring it is fully seated and properly engaged.

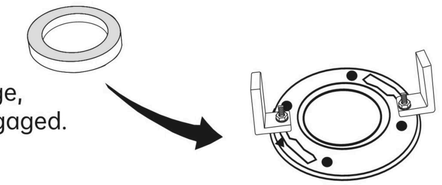

4. Align the toilet's outlet horn with the closet flange while ensuring the flange bolts align with the holes in the L-shaped mounting brackets.

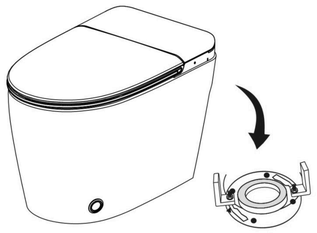

5. Insert the screws through the retaining clips, then pass them into the floor bolt mounting holes on both sides of the toilet base. Tighten the screws securely, and snap on the decorative caps.

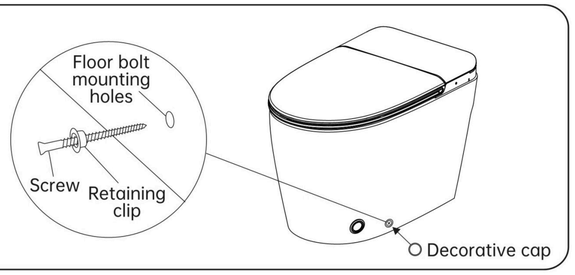

6. Apply a continuous bead of mildew-resistant silicone sealant around the base where the toilet meets the floor. After the sealant has fully cured, plug in the power cord, slowly open the angle valve, and verify proper tank filling and check for leaks at all connections.

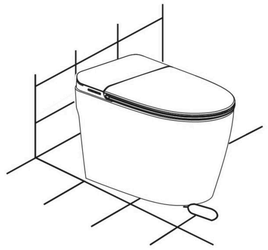

Filter Installation

When assembling the filter, apply PTFE plumber's tape to the threaded joint areas as shown in the diagram, then tighten the adapters securely.

Connect the assembled filter's threaded inlet to the existing angle valve. Then connect the toilet inlet hose to the outlet side of the filter. After all connections are complete, turn on the water supply and carefully check for leaks at every joint.

Important Notice: All water supply lines and internal connections have been pre-installed and tested at the factory. Do not disassemble or replace any factory-installed hoses or fittings, as this may result in leaks, water damage, or product malfunction during use.

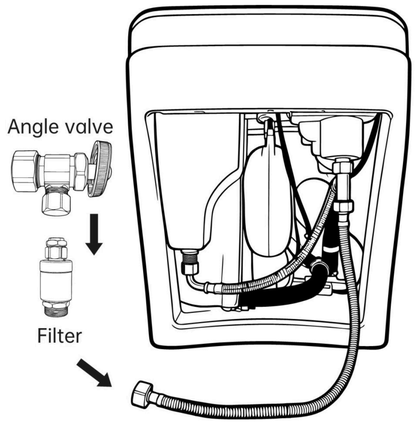

Battery Installation

Steps

1.Find Figure 2 to install the battery into the battery box.

2.Insert a new battery in the direction of the arrow and tighten the waterproof cap lockwise.

3.Press the flush button to make sure it flushes properly

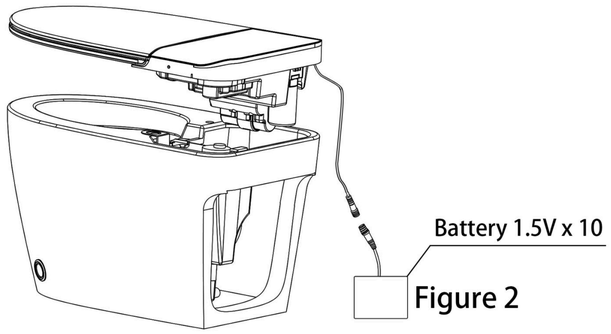

Figure 2

Note

1.The intelligent toilet accessories have been debugged and are strictly prohibited for personal disassembly.

2.Please use the fittings and hoses provided by our company.
Old fittings and hoses cannot be reused.

Replacing Battery

When the battery is nearly depleted, the remote control display will fade or turn off, and no signal will be transmitted.

※The service life of battery we supply will be very shot cause it is mainly for checking conditions of running in the installation.

- Ensure the position of positive pole and negative pole is correct
- The new and old batteries can not be mixed together
- Please use alkaline battery

Replacing battery of remote control

Open the back cover of remote control and replace two 1.5v AAA alkaline battery

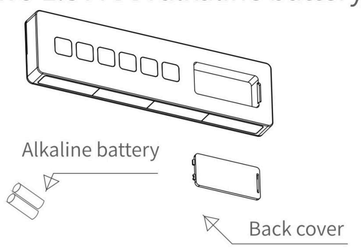

Freezing Damage

The smart toilet will be damage and leakage cause by freezing water from toilet in winter.

Please follow the instructions as below to aovid it.

General Measures	
1. Keep power on	**No water out cause freezing** Please use the hot cloth cover on the inlet valve or connecting parts until the water is unfrozen when the water is frozen.
2. Set the water temp. and seat temp. to high level and close the cover	
3. Turn on the heating in house · Please follow the ways as below to clean up the water from inlet tube if there is not heating. a. Close the inlet valve b. Run the rear washing until there is no water out after setting to normal level and put a hand on the seat sensor area.	**Caution** Do not put the hot water on the tube and do not blow hot air on it. ※ May cause damage of tube

Caution

Must close the inlet valve before dismantling inlet tube.

Ensure correct installation of inlet tube.

※May cause leakage easily

Error Recognition

There are some simple can be fixed easily.

Please confirm matters below before sending the product to a maintenance center.

Error	Reason	Method
No water out	power of socket is off	check if power failure
	power of product is off	press “start” button to boot the toilet
	no plug in socket	plug in socket well
	leakage of electric	pull out the plug and send the product to maintenance center
	inlet valve is closed	open the inlet valve
	the fillter is dirty	clean the fillter
	inlet tube is blocked	clean up the tube
	out of seat sensor area	adjust the seating position
	the nozzle is blocked	clean the nozzle
	low water pressure	increase water pressure
	water pipe or tube is frozen	Please use the hot cloth cover on the inlet valve or connecting parts until the water is unfrozen
Water not warm	not set the proper water temp. yet	presse water temp. button and set a proper level
	temp. of inlet water is too low	run washing for a while and check after a period of time
Cover not warm	not set the proper seat temp. yet	presse seat temp. button and set a proper level
Smell not well	blocked by dust	clean the part of deodorization

Please contact fora service if the faults still can not be fixed.

Specifications

Part			Spec.
Rated voltage			AC110V 60Hz
Power			1250W
Washing functions	Water flow	Rear	400-650 ml/min
		Bidet	450-650 ml/min
	Outlet temp.		home temp. / 34℃ / 37℃ / 40℃ (4 levles)
	Pressure		4 levles
	Heating power		1600W (max)
	Safety device		Leakage protector,Water temperature sensor,Thermal fuse
Drying	Wind temp.		home temp. / 45℃ / 50℃ / 55℃
	Heating power		250W
	Safety device		sensitive switch, temp. fuse
Seat heating	Seat temp.		home temp. / 34℃ / 37℃ / 40℃ (4 levles)
	Heating power		45W
	Safety device		sensitive switch, temp. fuse
Massage			Adjustable massage pressure levels
Nozzle position			adjustable for forward and backward
Inlet water temp.			5℃ ~40℃
Inlet pressure			1.5–7.5khf/cm² (0.1.5 –0.75Mpa)

Not in use long term

Must clean up the water for situations as below

- The product will be not in use for a long time that would cause blockage by polluted water
- The water will be freezed and leakage cause by falling temperature in uninhabited house

⚠ Caution

Must the inlet valve before dismantling any inlet tube

Ensure correct installation of inlet tube

※ May cause leakage easily